ASTROFLAME
MANUFACTURERS OF PASSIVE FIRE STOP PRODUCTS

CE

1121

Astroflame Fireseals Ltd
Unit 8 The I O Centre
Stephenson Road
Segensworth, Fareham
Hampshire, PO15 5RU

14

1121-CPR-JA5026

ETA-14/0099
ETAG 026-Part 1
ETAG 026-Part 2
ASTRO BATT
ASTRO COATING

"see ETA-14/0099 for relevant characteristics"

warrington certifire certification

APPROVED
CF614

EN13501-2
EN1026:2000
EN10140-2:2010
EN1366-3:2009
BS476 part 20&22

Technical Data Sheet

Astro Batt®

UIC of product-type: CBCT

Issue: 1
July 2014

Astroflame Ltd
Unit 8, The I O Centre
Stephenson Road
Segensworth, Fareham
Hampshire, PO15 5RU

Tel: +44 (0) 1329 844500
Fax: +44 (0) 1329 844600
Email: sales@astroflame.com
Website: www.astroflame.com

warrington certifire certification UKAS PRODUCT CERTIFICATION 087

warrington ISO9001 certification UKAS QUALITY MANAGEMENT 087

TECHNICAL DATA SHEET

ASTRO BATT®

ETA 14-0099

CE-1121-CPR-JA5026

Unique identification code of product-type: CBCT

Technical Description of the Product

Astro Batt is Coated mineral wool board used to reinstate the fire resistance performance of wall constructions where they have been provided with apertures for the penetration of single or multiple services.

Astro Batt is supplied coated on both faces. The Board is then cut and friction fit into the aperture, prior to being inserted into the aperture in the wall

Astro Batts are 50mm thick and supplied in overall dimensions 1200mm x 600mm with a density of 140kg/m^3

Astro Intu Mastic is required to seal all joints and junctions during the sealing process. Astro Intu Mastic is subject to a separate ETA referenced ETA 14-0049 & 14-0050

Astro HPE Sealant is required to seal around specific services. Astro HPE Sealant is subject to a separate ETA referenced ETA 14/0044

Internal use - ETAG 026-3 (used as European Assessment Document EAD) Type Z_1

Specification of the intended use in accordance with the relevant EAD

Intended use

The intended use of Astro Batt is to reinstate the fire resistance performance of rigid and flexible wall constructions where they are penetrated by various cables and metallic pipes

The intended use of Astro Batt is Coated mineral wool board used to reinstate the fire resistance performance of wall & floor construction where they have been provided for blank seals

The specific elements of construction that the system Astro Batt may be used to provide a penetration seal in, are as follows:

Rigid walls

The wall must have a minimum thickness of 150mm and comprise concrete, aerated concrete or masonry, with a minimum density of 650kg/m^3

Rigid walls

The wall must have a minimum thickness of 100mm and comprise concrete, aerated concrete or masonry, with a minimum density of 650kg/m^3

Rigid floors

The floor must have a minimum thickness of 150mm and comprise concrete, aerated concrete or masonry, with a minimum density of 650kg/m^3

Flexible walls

The wall must have a minimum thickness of 100mm and comprise timber or steel studs lined on both faces with minimum 2 layers of 12.5mm thick, 'Type F' Gypsum boards according to EN 520. In timber stud walls, no part of the penetration shall be closer than 100mm to a stud, the cavity must be closed between the penetration seal and the stud and minimum 100mm of insulation of class A1 or A2 according to EN 13501-1, is provided within the cavity between the penetration seal and the stud

The supporting construction must be classified in accordance with EN 13501-2 for the required fire resistance period

The Astro Batt may be used to provide a penetration seal with pipes and cables

The total amount of cross sections of services (including insulation) should not exceed 60% of penetration area

The system Astro Coating may be used to seal apertures in the separating element up to 730mm wide by 1200mm high or 600mm x 600mm dependant on the configuration. The minimum permitted separation between adjacent seals/apertures is 200mm

Pipes must be installed singular, cables require no minimum separation

Unique identification code of product-type: CBCT

Services in walls shall be supported at maximum 250mm form the face of the separating element

The provisions made in the European Technical Assessment are based on an assumed working life of the Astro Batt of 10 years, provided that the conditions laid down in the product data sheet for the packaging/ transport/ storage/ installation/ use/ repair are met. The indications given on the working life cannot be interpreted as a guarantee given by the producer, but are to be regarded only as a means for choosing the right products in relation to the expected economically reasonable working life of the works

Use Category

Type Z1: Intended for use in internal conditions with humidity equal to or higher than 85% RH excluding temperatures below 0°C, without exposure to rain or UV

The seals may only be penetrated by the services described in this TDS; other parts or support constructions must not penetrate the seal.

The service support construction must be fixed to the building element containing the penetration seal or a suitable adjacent building element, in such a manner that in the case of fire, no additional load is imposed on the seal. Furthermore it is assumed that the unexposed face support is maintained foe the required period of fire resistance

Certain pipe configuration should be insulated with minimum 300mm long, 6mm thick Thermal Defence Wrap

Pipes must be perpendicular to seal surface

It is assumed that compressed air systems are switched off by other means in the case of fire

The function of the pipe seal in case of pneumatic dispatch systems, pressurised air systems etc. Is guaranteed only when the systems are shut off in case of fire.

The assessment does not cover the avoidance of destruction of the seal or of the abutting building element(s) by forces caused by temperature changes in case of fire. This has to be considered when designing the piping system.

The approval does not address any risks associated with leakage of dangerous liquids or gases caused by failure of pipe(s) in case of fire

The durability assessment does not take account of the possible effect of substances permeating through the pipe on the penetration seal

Air permeability

System Astro Batt has been tested in accordance with BS EN 1214--1 to provide the following results:

Product tested			**Astro Batt (50mm)**	
	Results under positive chamber pressure		Results under negative chamber pressure	
Pressure (Pa)	Leakage (m3/h)	Leakage (m3/m2/h)	Leakage (m3/h)	Leakage (m3/m2/h)
50	0.6	0.8	1.1	1.5
100	1.0	1.4	1.3	1.8
150	2.8	3.9	1.5	2.1
200	3.8	5.3	1.9	2.6
250	4.5	6.3	2.0	2.8
300	5.0	6.9	2.4	3.3
450	5.1	7.1	1.9	2.6
600	6.7	9.3	2.2	3.1

Unique identification code of product-type: CBCT

Dangerous substances

The applicant is required to submit a written declaration stating whether or not fire stopping and fire sealing product contains dangerous substances according to European and national regulations, when and where relevant in the Member States of destination, and shall list these substances

Astroflame Fireseal Limited have presented a declaration that all dangerous chemical substances ≥ 1.0% w/w as well as all toxic, carcinogenic, toxic for reproduction and mutagenic chemical substances ≥ 0.1% w/w (Status: 29. adaption - 2004/73/EG - of the EU directive 67/155/EEC - classification, packaging and labelling of dangerous substances) are stated in the Astro Batt and Coating material safety data sheets (according to 91/155/EEC including amendments) and have been considered for the classification of the products according to the directive 1999/45/EG (classification of preparations, including amendments).

All dangerous chemical substances are below the classification limits of 67/548/EEC

Durability and serviceability

Astro Batt has been tested in accordance with EOTA Technical Report - TR024 - Edition November 2006, and the results of the tests have demonstrated suitability for penetration seals intended for use in internal conditions with humidity equal to or higher than 85% RH excluding temperatures below 0°C, without exposure to rain or UV

Assessment and verification of Constancy of Performance (Here in after AVCP) system applied, with references to its legal base.

According to the decision 1999/454/EC of the European Commission the system of assessment and verification of constancy of performance (see Annex V to the Regulation (EU) No 305/2011) given in the following table apply:

Products	Intended uses	Level or Class	System
Fire stopping and fire sealing products	For fire compartmentation and / or fire protection or fore performance	Any	System 1

Resistance to Fire Classification of Astro Batt

Flexible and Rigid wall constructions according to ETAss 14-0099 with wall thickness of minimum 100mm

Penetration seal with Astro Batt installed centrally within the wall

Service(s)	Insulation	Seal	Classification
Mild Steel or Copper			
40mm diameter and 1.5 - 14.2mm wall	20mm thick foil faced glass wool insulation (min 80kg/m3)	15mm deep x 15mm wide annulus Astro graphite HPE Sealant to both faces seal	**E 90 U/C** **EI 60 U/C**
40 - 159mm diameter and 2.3 - 14.2mm wall	30mm thick foil faced glass wool insulation (min 80kg/m3)		**EI 60 U/C**

Service(s)	Insulation	Seal	Classification
Mild Steel			
40mm diameter and 1.7 - 14.2mm wall	20mm thick foil faced glass wool insulation (min 80kg/m3)	15mm deep x 15mm wide annulus Astro graphite HPE Sealant to both faces seal	**E 90 U/C** **EI 60 U/C**
40 - 150mm diameter and 2.3 - 14.2mm wall	30mm thick foil faced glass wool insulation (min 80kg/m3)		**EI 60 U/C**

TECHNICAL DATA SHEET

ASTRO BATT®

ETA 14-0099

CE-1121-CPR-JA5026

Unique identification code of product-type: CBCT

DESIGN TO ETA 14-0099 & CE 1121-CPR-JA5026
ASTRO BATT IN A FIRE RESISTANT MULTI METALLIC PIPE PENETRATION SEAL THROUGH FLEXIBLE WALL

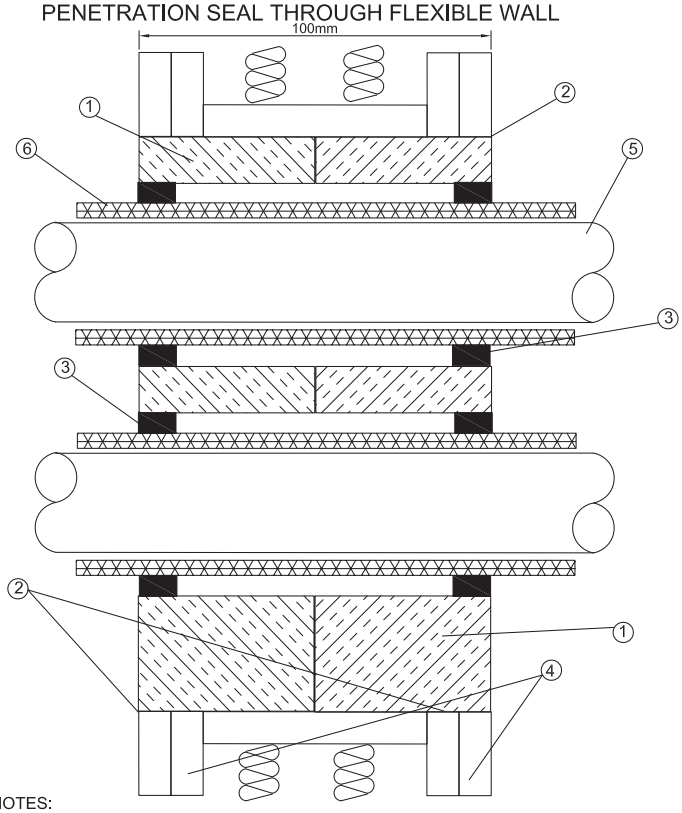

NOTES:
1 - ASTRO BATT 50mm THICKNESS - 140kg/m3 DENSITY
2 - ASTRO INTU MASTIC
3 - ASTRO HPE SEALANT
4 - 100mm FLEXIBLE WALL CONSTRUCTION
5 - MULTI METALLIC PIPES
6 - INSULATION MATERIAL

ASTROFLAME MANUFACTURERS OF PASSIVE FIRE STOP PRODUCTS	Astroflame (Fireseals) Ltd Intumescent House Unit 8 The IO Centre Stephenson Road Segensworth Fareham, PO15 5RU	FILE NAME: DET 2-0124 DATE: 20/05/14	ASTROFLAME has provided this specification on the basis of data, information & site conditions given to ASTROFLAME by the client, the respective ASTROFLAME product information & the existing level of technical knowledge. This specification relates to the expected performance of the proposed detail, were it to be subjected to the standardised test against which the judgement was made. The accuracy of this specification can only be guaranteed provided: 1. Only original ASTROFLAME products as defined within this specification are used 2. These specific products are used & installed only by a competant, experienced installer & by strictly obeying the conditions & calculations mentioned in this specification, as well as all relevent technical instructions, operating manuals, setting manuals, installation manuals & all other ASTROFLAME data sheets. 3. The proposed performance, listed prerequisities & criteria conform with actual existing site conditions & have been checked & agreed by the installer & client.

TECHNICAL DATA SHEET

ASTRO BATT®

ETA 14-0099
CE-1121-CPR-JA5026

Unique identification code of product-type: CBCT

DESIGN TO ETA 14-0099 & CE 1121-CPR-JA5026 ASTRO BATT IN A FIRE RESISTANT METALLIC PIPE PENETRATION SEAL THROUGH FLEXIBLE WALL

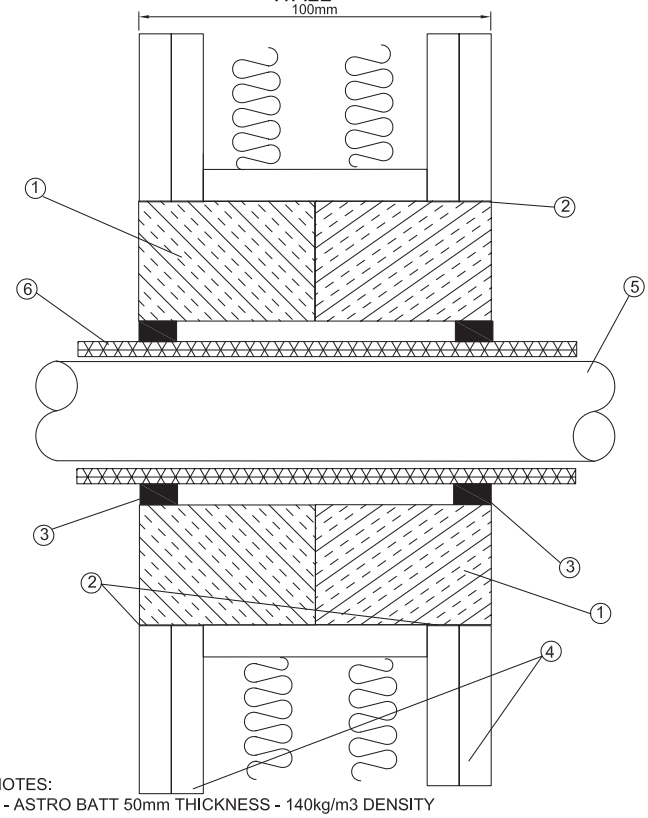

NOTES:
1 - ASTRO BATT 50mm THICKNESS - 140kg/m3 DENSITY
2 - ASTRO INTU MASTIC
3 - ASTRO HPE SEALANT
4 - 100mm FLEXIBLE WALL CONSTRUCTION
5 - METALLIC PIPE
6 - INSULATION MATERIAL

ASTROFLAME MANUFACTURERS OF PASSIVE FIRE STOP PRODUCTS	Astroflame (Fireseals) Ltd Intumescent House Unit 8 The IO Centre Stephenson Road Segensworth Fareham, PO15 5RU	FILE NAME: DET 2-0125 DATE: 20/05/14	ASTROFLAME has provided this specification on the basis of data, information & site conditions given to ASTROFLAME by the client, the respective ASTROFLAME product information & the existing level of technical knowledge. This specification relates to the expected performance of the proposed detail, were it to be subjected to the standardised test against which the judgement was made. The accuracy of this specification can only be guaranteed provided: 1. Only original ASTROFLAME products as defined within this specification are used 2. These specific products are used & installed only by a competant, experienced installer & by strictly obeying the conditions & calculations mentioned in this specification, as well as all relevent technical instructions, operating manuals, setting manuals, installation manuals & all other ASTROFLAME data sheets. 3. The proposed performance, listed prerequisities & criteria conform with actual existing site conditions & have been checked & agreed by the installer & client.

TECHNICAL DATA SHEET

ASTRO BATT®

ETA 14-0099
CE-1121-CPR-JA5026

Unique identification code of product-type: CBCT

Flexible and Rigid wall constructions according to ETAss 14-0099 with wall thickness of minimum 100mm

Penetration seal with Astro Batt installed centrally within the wall

Service(s)	Classification
Electrical cables up to 21mm dia	**EI 60**
Electrical cables 22mm to 80mm dia	**E 60, EI 45**
Cable Trays and Ladders	**EI 60**
100mm diameter bundle telecommunication cable type "F"	**EI 60**
Unsheathed electrical cables up to 17mm dia	**E 60, EI 30**
Unsheathed electrical cables 18 - 24mm dia	**E 60, EI 15**
Steel or Copper Conduits up to 16mm	**E 60, EI 15**
Plastic conduits up to 16mm	**EI 60**

DESIGN TO ETA 14-0099 & CE 1121-CPR-JA5026 ASTRO BATT IN A FIRE RESISTANT CABLE TRAY & CABLE PENETRATION SEAL THROUGH FLEXIBLE WALL

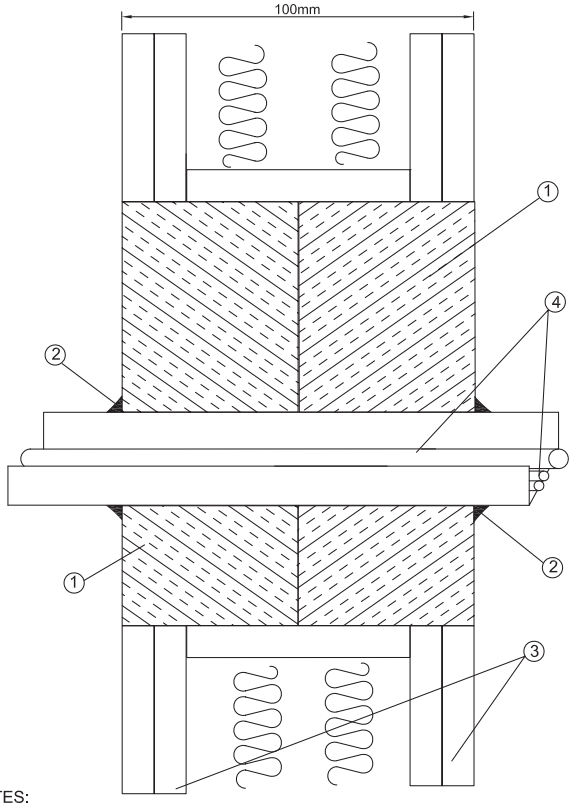

NOTES:
1 - ASTRO BATT 50mm THICKNESS - 140kg/m3 DENSITY
2 - ASTRO INTU MASTIC
3 - 100mm FLEXIBLE WALL CONSTRUCTION
4 - CABLE TRAY & CABLES

ASTROFLAME MANUFACTURERS OF PASSIVE FIRE STOP PRODUCTS	Astroflame (Fireseals) Ltd Intumescent House Unit 8 The IO Centre Stephenson Road Segensworth Fareham, PO15 5RU	FILE NAME: DET 2-0121 DATE: 20/05/14	ASTROFLAME has provided this specification on the basis of data, information & site conditions given to ASTROFLAME by the client, the respective ASTROFLAME product information & the existing level of technical knowledge. This specification relates to the expected performance of the proposed detail, were it to be subjected to the standardised test against which the judgement was made. The accuracy of this specification can only be guaranteed provided: 1. Only original ASTROFLAME products as defined within this specification are used 2. These specific products are used & installed only by a competant, experienced installer & by strictly obeying the conditions & calculations mentioned in this specification, as well as all relevent technical instructions, operating manuals, setting manuals, installation manuals & all other ASTROFLAME data sheets. 3. The proposed performance, listed prerequisities & criteria conform with actual existing site conditions & have been checked & agreed by the installer & client.

TECHNICAL DATA SHEET

ASTRO BATT®

ETA 14-0099

CE-1121-CPR-JA5026

Unique identification code of product-type: CBCT

DESIGN TO ETA 14-0099 & CE 1121-CPR-JA5026
ASTRO BATT IN A FIRE RESISTANT MULTI CABLE TRAY & CABLE PENETRATION SEAL THROUGH FLEXIBLE WALL

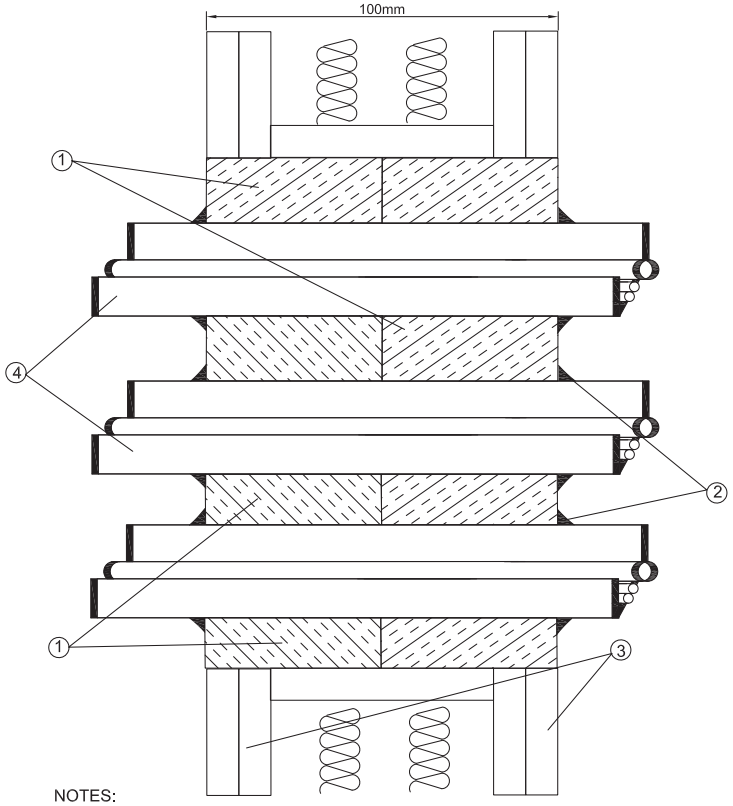

NOTES:
1 - ASTRO BATT 50mm THICKNESS - 140kg/m3 DENSITY
2 - ASTRO INTU MASTIC
3 - 100mm FLEXIBLE WALL CONSTRUCTION
4 - MULTI CABLE TRAY & CABLES

ASTROFLAME MANUFACTURERS OF PASSIVE FIRE STOP PRODUCTS	Astroflame (Fireseals) Ltd Intumescent House Unit 8 The IO Centre Stephenson Road Segensworth Fareham, PO15 5RU	FILE NAME: DET 2-0123 DATE: 20/05/14	ASTROFLAME has provided this specification on the basis of data, information & site conditions given to ASTROFLAME by the client, the respective ASTROFLAME product information & the existing level of technical knowledge. This specification relates to the expected performance of the proposed detail, were it to be subjected to the standardised test against which the judgement was made. The accuracy of this specification can only be guaranteed provided: 1. Only original ASTROFLAME products as defined within this specification are used 2. These specific products are used & installed only by a competant, experienced installer & by strictly obeying the conditions & calculations mentioned in this specification, as well as all relevent technical instructions, operating manuals, setting manuals, installation manuals & all other ASTROFLAME data sheets. 3. The proposed performance, listed prerequisities & criteria conform with actual existing site conditions & have been checked & agreed by the installer & client.

TECHNICAL DATA SHEET

ASTRO BATT®

ETA 14-0099
CE-1121-CPR-JA5026

Unique identification code of product-type: CBCT

Rigid wall constructions according to ETAss 14-0099 with wall thickness of minimum 150mm

Penetration seal with Astro Batt installed centrally within the wall

Service(s)	Classification
Electrical cables up to 80mm dia	**EI 60**
Cable Trays and Ladders	**EI 60**
100mm diameter bundle telecommunication cable type "F"	**EI 60**
Unsheathed electrical cables up to 24mm dia	**EI 60**

DESIGN TO ETA 14-0099 & CE 1121-CPR-JA5026
ASTRO BATT IN A FIRE RESISTANT CABLE TRAY & CABLE
PENETRATION SEAL THROUGH RIGID WALL

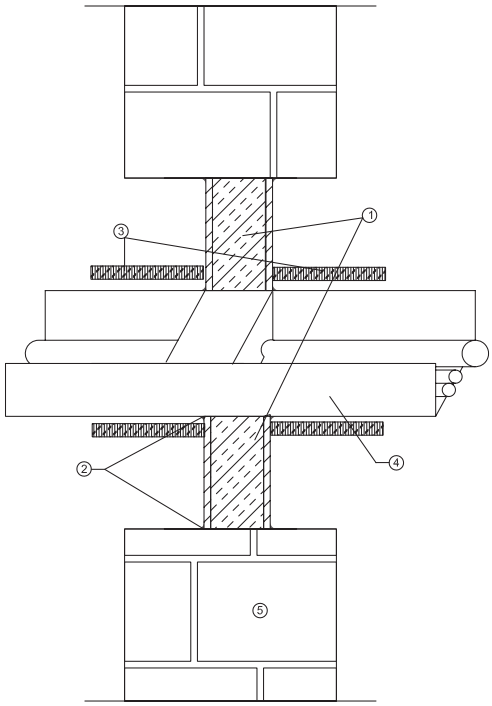

NOTES:
1. ASTRO BATT 50mm THICKNESS - 140kg/m3
2. ASTRO INTU MASTIC
3. ASTRO THERMAL DEFENSE WRAP TO BE INSTALLED TO SERVICES 300MM EACH SIDE OF THE OPENING 300mm LONG
4. CABLE TRAY WITH CABLES
5. RIGID WALL

ASTROFLAME MANUFACTURERS OF PASSIVE FIRE STOP PRODUCTS	Astroflame (Fireseals) Ltd Intumescent House Unit 8 The IO Centre Stephenson Road Segensworth Fareham, PO15 5RU	FILE NAME: DET 2-0119 DATE: 20/05/14	ASTROFLAME has provided this specification on the basis of data, information & site conditions given to ASTROFLAME by the client, the respective ASTROFLAME product information & the existing level of technical knowledge. This specification relates to the expected performance of the proposed detail, were it to be subjected to the standardised test against which the judgement was made. The accuracy of this specification can only be guaranteed provided: 1. Only original ASTROFLAME products as defined within this specification are used 2. These specific products are used & installed only by a competant, experienced installer & by strictly obeying the conditions & calculations mentioned in this specification, as well as all relevent technical instructions, operating manuals, setting manuals, installation manuals & all other ASTROFLAME data sheets. 3. The proposed performance, listed prerequisities & criteria conform with actual existing site conditions & have been checked & agreed by the installer & client.

TECHNICAL DATA SHEET

ASTRO BATT®

ETA 14-0099

CE-1121-CPR-JA5026

Unique identification code of product-type: CBCT

DESIGN TO ETA 14-0099 & CE 1121-CPR-JA5026
ASTRO BATT IN A FIRE RESISTANT METALLIC PIPE PENETRATION SEAL THROUGH RIGID WALL

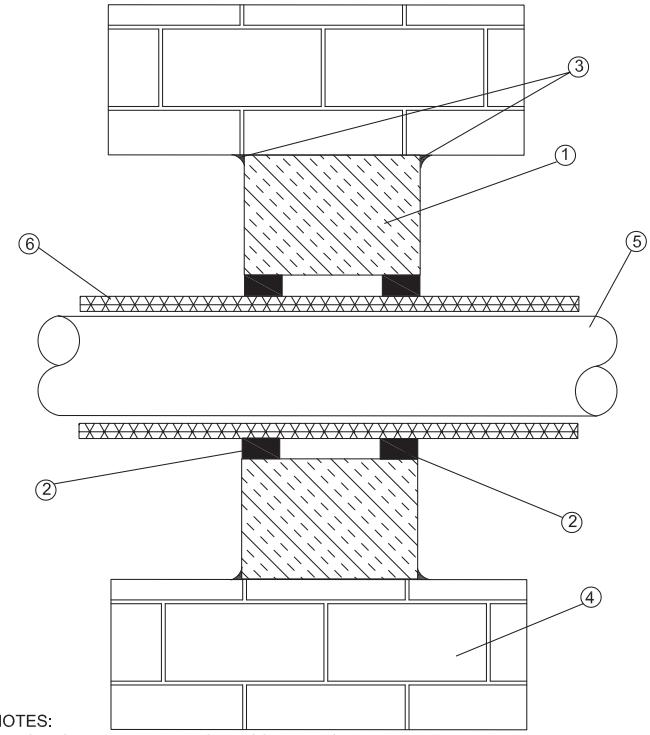

NOTES:
1 - ASTRO BATT 50mm THICKNESS - 140kg/m3
2 - ASTRO HPE SEALANT
3 - ASTRO INTU MASTIC
4 - RIGID CONSTRUCTION
5 - METALLIC PIPE
6 - INSULATION MATERIAL

ASTROFLAME MANUFACTURERS OF PASSIVE FIRE STOP PRODUCTS	Astroflame (Fireseals) Ltd Intumescent House Unit 8 The IO Centre Stephenson Road Segensworth Fareham, PO15 5RU	FILE NAME: DET 2-0120 DATE: 20/05/14	ASTROFLAME has provided this specification on the basis of data, information & site conditions given to ASTROFLAME by the client, the respective ASTROFLAME product information & the existing level of technical knowledge. This specification relates to the expected performance of the proposed detail, were it to be subjected to the standardised test against which the judgement was made. The accuracy of this specification can only be guaranteed provided: 1. Only original ASTROFLAME products as defined within this specification are used 2. These specific products are used & installed only by a competent, experienced installer & by strictly obeying the conditions & calculations mentioned in this specification, as well as all relevent technical instructions, operating manuals, setting manuals, installation manuals & all other ASTROFLAME data sheets. 3. The proposed performance, listed prerequisities & criteria conform with actual existing site conditions & have been checked & agreed by the installer & client.

TECHNICAL DATA SHEET

ASTRO BATT®

ETA 14-0099

CE-1121-CPR-JA5026

Unique identification code of product-type: CBCT

Flexible wall construction according to classification report 335738, penetration seal with Astro Batt installed for blank opening with wall thickness of minimum 100mm

Test Results	
Integrity Performance	163 minutes
Insulation Performance	161 minutes

DESIGN TO ETA 14-0099 & CE 1121-CPR-JA5026
ASTRO BATT IN A FIRE RESISTANT BLANK SEAL THROUGH FLEXIBLE WALL

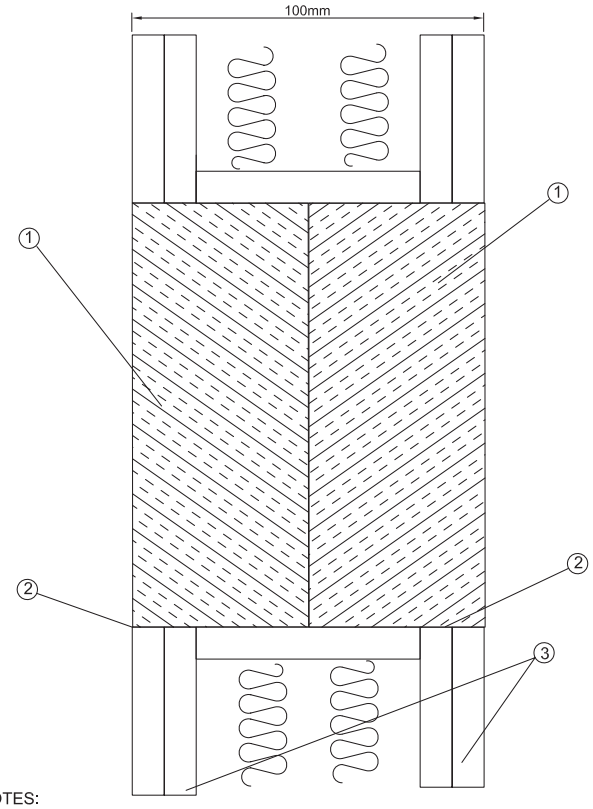

NOTES:
1 - ASTRO BATT 50mm THICKNESS - 140kg/m3 DENSITY
2 - ASTRO INTU MASTIC
3 - 100mm FLEXIBLE WALL CONSTRUCTION

ASTROFLAME MANUFACTURERS OF PASSIVE FIRE STOP PRODUCTS	Astroflame (Flreseals) Ltd Intumescent House Unit 8 The IO Centre Stephenson Road Segensworth Fareham, PO15 5RU	FILE NAME: DET 2-0122 DATE: 20/05/14	ASTROFLAME has provided this specification on the basis of data, information & site conditions given to ASTROFLAME by the client, the respective ASTROFLAME product information & the existing level of technical knowledge. This specification relates to the expected performance of the proposed detail, were it to be subjected to the standardised test against which the judgement was made. The accuracy of this specification can only be guaranteed provided: 1. Only original ASTROFLAME products as defined within this specification are used 2. These specific products are used & installed only by a competant, experienced installer & by strictly obeying the conditions & calculations mentioned in this specification, as well as all relevent technical instructions, operating manuals, setting manuals, installation manuals & all other ASTROFLAME data sheets. 3. The proposed performance, listed prerequisities & criteria conform with actual existing site conditions & have been checked & agreed by the installer & client.

TECHNICAL DATA SHEET

ASTRO BATT®

ETA 14-0099
CE-1121-CPR-JA5026

Unique identification code of product-type: CBCT

Rigid floor construction according to classification report 335738, penetration seal with Astro Batt installed for blank opening with floor thickness of minimum 150mm

Specimen	Integrity (minutes)			Insulation (minutes)
A	79	79	79	63

DESIGN TO ETA 14-0099 & CE 1121-CPR-JA5026
ASTRO BATT IN A FIRE RESISTANT BLANK SEAL THROUGH RIGID FLOOR

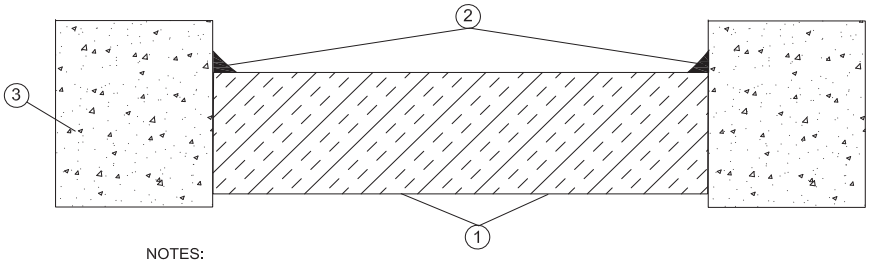

NOTES:
1 - ASTRO BATT 50mm THICKNESS - 140KG/m3
2 - ASTRO INTU MASTIC
3 - RIGID CONSTRUCTION

FILE NAME: DET 2-0126
DATE: 20/05/14

Astroflame (Fireseals) Limited
Intumescent House
Unit 8 The IO Centre
Stephenson Road
Segensworth
Fareham, PO15 5RU

ASTROFLAME has provided this specification on the basis of data, information & site conditions given to ASTROFLAME by the client, the respective ASTROFLAME product information & the existing level of technical knowledge. This specification relates to the expected performance of the proposed detail, were it to be subjected to the standardised test against which the judgement was made. The accuracy of this specification can only be guaranteed provided:
1. Only original ASTROFLAME products as defined within this specification are used
2. These specific products are used & installed only by a competant, experienced installer & by strictly obeying the conditions & calculations mentioned in this specification, as well as all relevent technical instructions, operating manuals, setting manuals, installation manuals & all other ASTROFLAME data sheets.
3. The proposed performance, listed prerequisities & criteria conform with actual existing site conditions & have been checked & agreed by the installer & client.

Unique identification code of product-type: CBCT

Durability and Serviceability

Requirement - ETAG No 026 Part 2: Clause 2.4.12

The Principle of the durability tests is to select suitable physico-chemical or technological properties of the product and to check whether these properties have changed during exposure of the product to defined exposure conditions. The product shall be tested according to the following procedures:

Property	Test Method
Appearance	EOTA ETAG No 026: Part2: Clause B.12
Flexibility	ASTM D522
LOI	ISO 4589-2: 1996

The following evidence presented in MECH/W00202RL001 has been provided in relation to this requirement:

Appearance

Specimen	Exposure	Before	After
1	Durability Z1	Off-white, smooth surface, maintained shape	No change
4	23oC 50% RH	Off-white, smooth surface, maintained shape	No change

Flexibility

Anvil diameter	Specimen	Control	Z1 Durability
1” 25mm	1	PASS	PASS
5/8” 16mm	2	PASS	PASS
3/8” 9.5mm	3	PASS	PASS
1/4” 6.4mm	4	PASS	PASS
1/8” 3.2mm	5	PASS	PASS

LOI

	Oxygen index
Control	26.7
Z1 Durability	27.5

Conclusions

The data discussed above satisfies the general aspects relating to fitness for use: Durability and serviceability: 12 of EOTA ETAG No 026: Part 2, for Type Z1 environmental conditions: Products for penetration seals intended for uses at internal conditions with high humidity, excluding temperatures below 0oC

ASTRO BATT®

ETA 14-0099
CE-1121-CPR-JA5026

Unique identification code of product-type: CBCT

Identification of the product

Requirement ETAG No 026: Part 2: Clause 5 - The Intertek MSG report No. MECH/W002020RL001 detail the following tests, as detailed in ETAG No 026: Part 2, utilised to identify Astro Coating:

Product characteristic	Verification Method
TGA	EOTA ETAG No 026: Part 3: Clause B.2
Viscosity of Liquid Materials	ISO 3219
Density of Liquid Materials	ISO 2811-1
LOI	ISO 4589-2: 1996
Flexibility	ASTM D522

Unique identification code of product-type: CBCT

Certification of Constancy of Performance

Notified body No. 1121
Warrington Certification Limited, Holmesfield Road, Warrington, Cheshire, WA1 2DS, UK

Certificate of constancy of performance

1121-CPR-JA5026

In compliance with *Regulation 305/2011/EU of the European Parliament and of the Council of 9 March 2011* (the Construction Products Regulation or CPR), this certificate applies to the construction product

Astro Batt and Coating

Intended use: Penetration Seals

Essential characteristics	Performance according to	Technical specification
Reaction to fire	ETA 14/0099	ETAG 26-02 (Used as EAD)
Resistance to fire	ETA 14/0099	ETAG 26-02 (Used as EAD)
Dangerous substances	ETA 14/0099	ETAG 26-02 (Used as EAD)

Page 1 of 2

This certificate is the property of Warrington Certification Limited, part of Exova (UK) Ltd.
Registered office: Lochend Industrial Estate, Newbridge, Midlothian, EH28 8PL, UK. Registered in Scotland, No. SC 70429

Certification of Constancy of Performance

warrington certification

Exova

Certificate of constancy of performance

1121-CPR-JA5026

produced for

Astroflame (fireseals) Limited
Unit 8 The IO Centre
Stephenson Road
Segensworth
Fareham
Hampshire
PO15 5RU
UK

and produced in the manufacturing plant

E/055
This is coded format and the information is held by the Notified Body

This certificate attests that all provisions concerning the assessment and verification of constancy of performance and the performances described in the European Technical Approval referenced

ETA 14/0099

under system 1 *of AVCP* are applied and that

the product fulfils all the prescribed requirements set out above.

This certificate was first issued on **08/04/14** and will remain valid as long as the test methods and/or factory production control requirements included in the harmonised standard, used to assess the performance of the declared characteristics, do not change, and the product, and the manufacturing conditions in the plant are not modified significantly.

Paul Duggan
Certification Manager
Warrington Certification Ltd

CE

Page 2 of 2

This certificate is the property of Warrington Certification Limited, part of Exova (UK) Ltd.
Registered office: Lochend Industrial Estate, Newbridge, Midlothian, EH28 8PL, UK. Registered in Scotland, No. SC 70429

Unique identification code of product-type: CBCT

Astro Batts & Coating (with Astro Intu Mastic)

This Approval to the use of Astro Batts & Coating (with Astro Intu Mastic) for the fire protection where services are penetrating walls. The detailed scope is given in the Approval Matrix included in this Certifcate. This shows the thickness and acceptable services for Astro Batts & Coating (with Astro Intu Mastic) required fire resistance periods in accordance with BS 476: Part 20: 1987 of up to 240 minutes for differing services and wall constructions and up to 120 minutes for floor constructions. The scope of this certification complies with the guidelines stated in the ASFP Redbook: 3rd Edition for 3rd party certification schemes.

This certification is designed to demonstrate compliance of the product or system specifically with Approved Document B (England and Wales, Section 2 of the Technical standards (Scotland), Technical Booklet E (N. Ireland). If compliance is required to other regulatory or guidance documents there may be additional considerations or conflict to be taken into account.

The product is approved on the basis of:

- Initial type testing
- Audit testing at the frequency specified inTS03
- A design appraisal against TS03
- Inspection and surveillance of factory production control

The stud partition drywalls, masonry or concrete walls shall be at least 130mm thick and have at least the same fire rating as that required for the penetration seal.

The services which may be fitted through the seals are cable ladders, cables, pipes and ducts as detailed within the Approval Matrix included in this Certificate

The approval relates to ongoing production. Product and/or its immediate packaging is identified with the manufacturer's name, the product name or number, the CERTIFIRE name or name and mark, together with the CERTIFIRE certificate number and application where appropriate.

Unique identification code of product-type: CBCT

Astro Batts & Coating (with Astro Intu Mastic)

Approval Matrix - Up To 120 Minute Walls

Product Name:	Astro Batts & Coating (with Astro Intu Mastic)		
Coating/DFT:	Astro Coating/1mm thick		
Density:	140kg/m3 minimum		
Barrier	Service	Integrity	Insulation
Single layer (50 & 60mm)	Cable Ladder (340mm wide by 100mm high max)	120 minutes	60 minutes
	Cables up to 26mm diameter	120 minutes	N/A
	Steel pipes up to 60mm diameter	120 minutes	N/A
	PVC pipes up to 110mm diameter*	60 minutes	N/A
	Steel ducts (445mm wide by 445mm high max)	120 minutes	N/A
Double layer (100 & 120mm)	Cable Ladder (340mm wide by 100m high max)	120 minutes	60 minutes
	Cables up to 26mm diameter	120 minutes	60 minutes
	Steel pipes up to 60mm diameter	120 minutes	30 minutes
	PVC pipes up to 110mm diameter*	60 minutes	N/A
	Steel ducts (445mm wide by 445mm high max)	120 minutes	N/A
* PVC pipes must be used in conjunction with Astroflame Pipe Wraps over sealed with ablative coating			
Maximum aperture	2400 mm high by 1200mm 9120 minutes integrity performance) 2880mm high by 1440mm (60 minutes integrity performance) Multiple apertures must be separated by a minimum of 400mm in drywalls and 240mm in concrete/masonry constructions		
Walls	The walls shall be a minimum of 130mm thick The minimum density for the concrete or brick of the wall is 780kg/m3 and for walls made of concrete blocks is 600kg/m3. Partition drywalls will comprise at least 2 layers of 15mm thick Type 'F' gypsum boards on each side of minimum 70mm by 32mm steel studs All concrete, masonry or drywalls shall have at least the same fire rating as that required for the barrier		
Application Technique	Concrete/masonry walls Boards tightly friction fitted into the aperture at mid-depth of wall. Board joints and the board to aperture junction is sealed with Astro coating or Astro Intu Mastic. Apertures for penetrating items are to be tightly fitting and be sealed with Astro Coating or Astro Intu Mastic and must be separated by at least 400mm Drywalls As above and additionally the aperture must be formed from track sections and be lined with two layers of 15mm thick Type 'F' gypsum boards		
Service Coat-Back	Not required	U Value	Not Known
Service Support Requirements	Services should be rigidly supported via steel angles, hangers or channels, not further than 500mm the surface of the sealing system on both faces.		

TECHNICAL DATA SHEET

ASTRO BATT®

TECHNICAL SCHEDULE
No. CF614

Unique identification code of product-type: CBCT

DESIGN TO CERTIFIRE CF 614
ASTRO BATT IN A FIRE RESISTANT METALLIC PIPE
PENETRATION SEAL THROUGH FLEXIBLE WALL

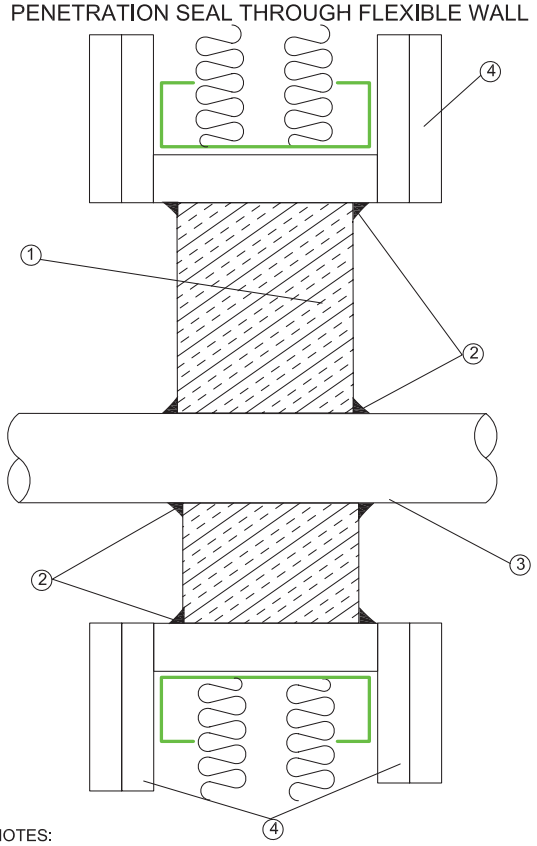

NOTES:
1 - ASTRO BATT 50mm THICKNESS - 140kg/m3 DENSITY
2 - ASTRO INTU MASTIC
3 - METALLIC PIPE
4 - FLEXIBLE CONSTRUCTION

ASTROFLAME MANUFACTURERS OF PASSIVE FIRE STOP PRODUCTS	Astroflame (FIreseals) Ltd Intumescent House Unit 8 The IO Centre Stephenson Road Segensworth Fareham, PO15 5RU	FILE NAME: DET 2-0103 DATE: 20/05/14	ASTROFLAME has provided this specification on the basis of data, information & site conditions given to ASTROFLAME by the client, the respective ASTROFLAME product information & the existing level of technical knowledge. This specification relates to the expected performance of the proposed detail, were it to be subjected to the standardised test against which the judgement was made. The accuracy of this specification can only be guaranteed provided: 1. Only original ASTROFLAME products as defined within this specification are used 2. These specific products are used & installed only by a competant, experienced installer & by strictly obeying the conditions & calculations mentioned in this specification, as well as all relevent technical instructions, operating manuals, setting manuals, installation manuals & all other ASTROFLAME data sheets. 3. The proposed performance, listed prerequisities & criteria conform with actual existing site conditions & have been checked & agreed by the installer & client.

TECHNICAL DATA SHEET

ASTRO BATT®

TECHNICAL SCHEDULE
No. CF614

Unique identification code of product-type: CBCT

DESIGN TO CERTIFIRE CF 614 ASTRO BATT IN A FIRE RESISTANT SEAL AND ASTRO WRAP WITH A COMBUSTIBLE PIPE PENETRATION THROUGH FLEXIBLE WALL

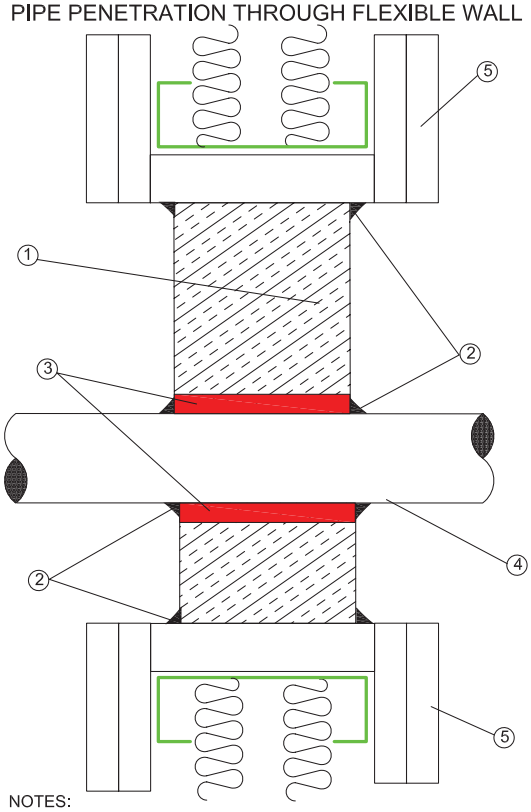

NOTES:
1 - ASTRO BATT 50mm THICKNESS - 140kg/m3 DENSITY
2 - ASTRO INTU MASTIC
3 - ASTRO WRAP
4 - COMBUSTIBLE PIPE
5 - FLEXIBLE CONSTRUCTION

ASTROFLAME MANUFACTURERS OF PASSIVE FIRE STOP PRODUCTS	Astroflame (FIreseals) Ltd Intumescent House Unit 8 The IO Centre Stephenson Road Segensworth Fareham, PO15 5RU	FILE NAME: DET 2-0104 DATE: 20/05/14	ASTROFLAME has provided this specification on the basis of data, information & site conditions given to ASTROFLAME by the client, the respective ASTROFLAME product information & the existing level of technical knowledge. This specification relates to the expected performance of the proposed detail, were it to be subjected to the standardised test against which the judgement was made. The accuracy of this specification can only be guaranteed provided: 1. Only original ASTROFLAME products as defined within this specification are used 2. These specific products are used & installed only by a competant, experienced installer & by strictly obeying the conditions & calculations mentioned in this specification, as well as all relevent technical instructions, operating manuals, setting manuals, installation manuals & all other ASTROFLAME data sheets. 3. The proposed performance, listed prerequisities & criteria conform with actual existing site conditions & have been checked & agreed by the installer & client.

ASTRO BATT®

TECHNICAL SCHEDULE
No. CF614

Unique identification code of product-type: CBCT

DESIGN TO CERTIFIRE CF 614
ASTRO BATT IN A FIRE RESISTANT CABLE TRAY & CABLES
PENETRATION SEAL THROUGH FLEXIBLE WALL

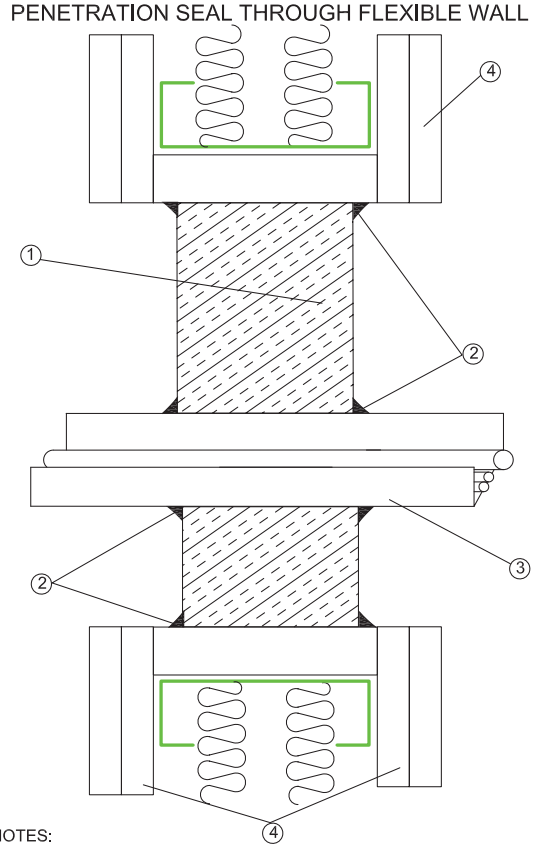

NOTES:
1 - ASTRO BATT 50mm THICKNESS - 140kg/m3 DENSITY
2 - ASTRO INTU MASTIC
3 - CABLE TRAY & CABLES
4 - FLEXIBLE CONSTRUCTION

ASTROFLAME MANUFACTURERS OF PASSIVE FIRE STOP PRODUCTS	Astroflame (FIreseals) Ltd Intumescent House Unit 8 The IO Centre Stephenson Road Segensworth Fareham, PO15 5RU	FILE NAME: DET 2-0101 DATE: 20/05/14	ASTROFLAME has provided this specification on the basis of data, information & site conditions given to ASTROFLAME by the client, the respective ASTROFLAME product information & the existing level of technical knowledge. This specification relates to the expected performance of the proposed detail, were it to be subjected to the standardised test against which the judgement was made. The accuracy of this specification can only be guaranteed provided: 1. Only original ASTROFLAME products as defined within this specification are used 2. These specific products are used & installed only by a competant, experienced installer & by strictly obeying the conditions & calculations mentioned in this specification, as well as all relevent technical instructions, operating manuals, setting manuals, installation manuals & all other ASTROFLAME data sheets. 3. The proposed performance, listed prerequisities & criteria conform with actual existing site conditions & have been checked & agreed by the installer & client.

ASTRO BATT®

TECHNICAL SCHEDULE
No. CF 614

Unique identification code of product-type: CBCT

DESIGN TO CERTIFIRE CF 614
ASTRO BATT IN A FIRE RESISTANT CABLE TRAY & CABLES
PENETRATION SEAL THROUGH FLEXIBLE WALL

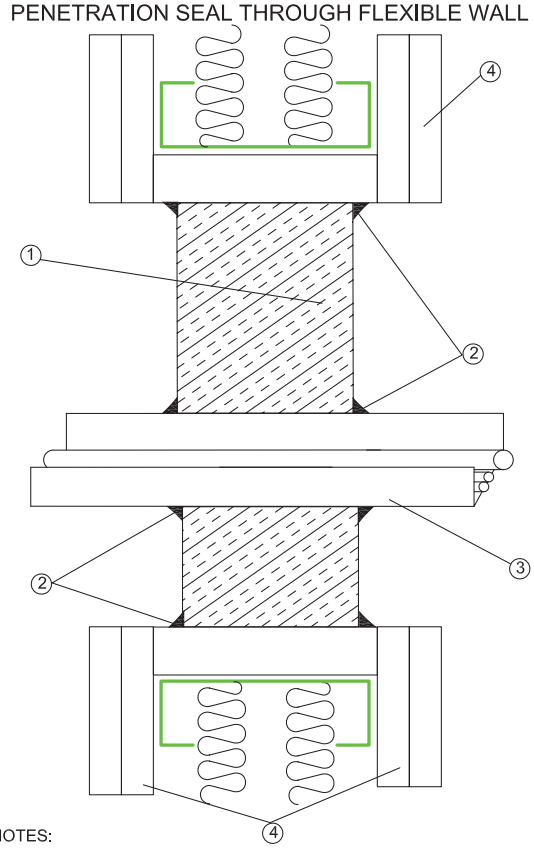

NOTES:
1 - ASTRO BATT 50mm THICKNESS - 140kg/m3 DENSITY
2 - ASTRO INTU MASTIC
3 - CABLE TRAY & CABLES
4 - FLEXIBLE CONSTRUCTION

ASTROFLAME MANUFACTURERS OF PASSIVE FIRE STOP PRODUCTS	Astroflame (FIreseals) Ltd Intumescent House Unit 8 The IO Centre Stephenson Road Segensworth Fareham, PO15 5RU	FILE NAME: DET 2-0101 DATE: 20/05/14	ASTROFLAME has provided this specification on the basis of data, information & site conditions given to ASTROFLAME by the client, the respective ASTROFLAME product information & the existing level of technical knowledge. This specification relates to the expected performance of the proposed detail, were it to be subjected to the standardised test against which the judgement was made. The accuracy of this specification can only be guaranteed provided: 1. Only original ASTROFLAME products as defined within this specification are used 2. These specific products are used & installed only by a competant, experienced installer & by strictly obeying the conditions & calculations mentioned in this specification, as well as all relevent technical instructions, operating manuals, setting manuals, installation manuals & all other ASTROFLAME data sheets. 3. The proposed performance, listed prerequisities & criteria conform with actual existing site conditions & have been checked & agreed by the installer & client.

TECHNICAL DATA SHEET

ASTRO BATT®

TECHNICAL SCHEDULE
No. CF614

Unique identification code of product-type: CBCT

DESIGN TO CERTIFIRE CF 614
ASTRO BATT IN A FIRE RESISTANT STEEL DUCT &
DAMPER PENETRATION SEAL THROUGH RIGID WALL

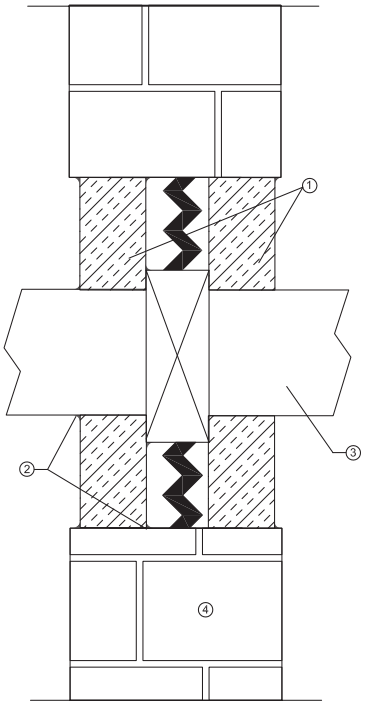

NOTES:
1 - ASTRO BATT 50mm THICKNESS - 140kg/m3
2 - ASTRO INTU MASTIC
3 - STEEL DUCT & DAMPER - DAMPER STRUCTURALLY SUPPORTED AS PER MANUFACTURERS DETAIL
4 - RIGID WALL

ASTROFLAME MANUFACTURERS OF PASSIVE FIRE STOP PRODUCTS	Astroflame (FIreseals) Ltd Intumescent House Unit 8 The IO Centre Stephenson Road Segensworth Fareham, PO15 5RU	FILE NAME: DET 2-0002 DATE: 20/05/14	ASTROFLAME has provided this specification on the basis of data, information & site conditions given to ASTROFLAME by the client, the respective ASTROFLAME product information & the existing level of technical knowledge. This specification relates to the expected performance of the proposed detail, were it to be subjected to the standardised test against which the judgement was made. The accuracy of this specification can only be guaranteed provided: 1. Only original ASTROFLAME products as defined within this specification are used 2. These specific products are used & installed only by a competant, experienced installer & by strictly obeying the conditions & calculations mentioned in this specification, as well as all relevent technical instructions, operating manuals, setting manuals, installation manuals & all other ASTROFLAME data sheets. 3. The proposed performance, listed prerequisities & criteria conform with actual existing site conditions & have been checked & agreed by the installer & client.

ASTRO BATT®

TECHNICAL SCHEDULE
No. CF614

ASTROFLAME
MANUFACTURERS OF PASSIVE FIRE STOP PRODUCTS

Unique identification code of product-type: CBCT

Astro Batts & Coating (with Astro Intu Mastic)

Approval Matrix - Up To 240 Minute Walls

Product Name:	Astro Batts & Coating (with Astro Intu Mastic)		
Coating/DFT:	Astro Coating/1mm thick		
Density:	140kg/m3 minimum		
Barrier	Service	Integrity	Insulation
Single layer (50 & 60mm)	Cable Ladder (340mm wide by 100mm high max)	240 minutes	N/A
	Cables up to 26mm diameter	240 minutes	N/A
	Areas of seal without services	240 minutes	60 minutes
Double layer (100 & 120mm)	Cable Ladder (340mm wide by 100m high max)	240 minutes	60 minutes
	Cables up to 20mm diameter	240 minutes	60 minutes
	Areas of seal without services	240 minutes	240 minutes
Maximum aperture	1000 mm high by 660mm wide subject to a maximum area of 0.6m2 Multiple apertures must be separated by a minimum of 240mm in concrete/masonry constructions		
Walls	The walls shall be a minimum of 140mm thick The minimum density for the concrete or brick of the wall is 780kg/m3 and for walls made of concrete blocks is 600kg/m3. All concrete, masonry walls shall have at least the same fire rating as that required for the barrier		
Application Technique	Concrete/masonry walls Boards tightly friction fitted into the aperture at mid-depth of wall. Board joints and the board to aperture junction is sealed with Astro coating or Astro Intu Mastic. Apertures for penetrating items are to be tightly fitting and be sealed with Astro Coating or Astro Intu Mastic and must be separated by at least 240mm		
Service Coat-Back	Not required	U Value	Not Known
Service Support Requirements	Services should be rigidly supported via steel angles, hangers or channels, not further than 500mm the surface of the sealing system on both faces.		

TECHNICAL DATA SHEET

ASTRO BATT®

TECHNICAL SCHEDULE
No. CF614

Unique identification code of product-type: CBCT

DESIGN TO CERTIFIRE CF 614 ASTRO BATT IN A FIRE RESISTANT METALLIC PIPE PENETRATION SEAL THROUGH RIGID WALL

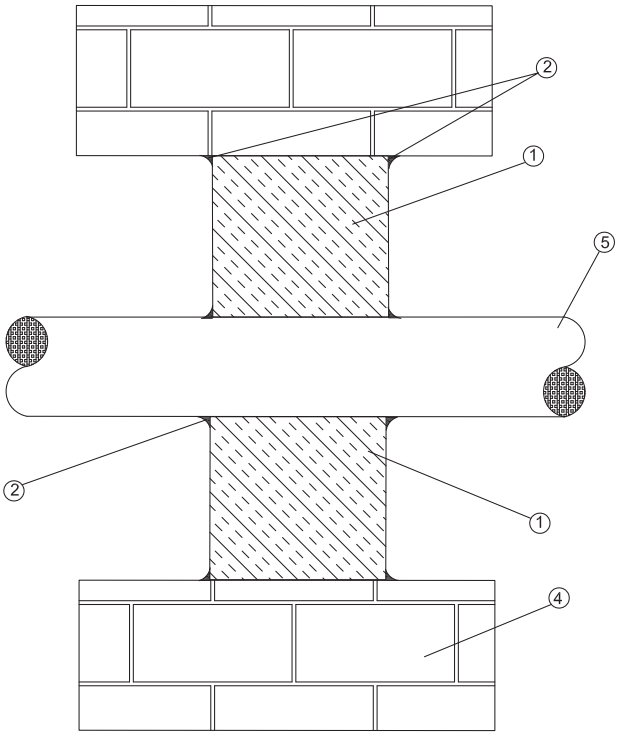

NOTES:
1 - ASTRO BATT 50mm THICKNESS - 140kg/m3
2 - ASTRO INTU MASTIC
3 - RIGID CONSTRUCTION
4 - METALLIC PIPE

ASTROFLAME MANUFACTURERS OF PASSIVE FIRE STOP PRODUCTS	Astroflame (FIreseals) Ltd Intumescent House Unit 8 The IO Centre Stephenson Road Segensworth Fareham, PO15 5RU	FILE NAME: DET 2-0004 DATE: 20/05/14	ASTROFLAME has provided this specification on the basis of data, information & site conditions given to ASTROFLAME by the client, the respective ASTROFLAME product information & the existing level of technical knowledge. This specification relates to the expected performance of the proposed detail, were it to be subjected to the standardised test against which the judgement was made. The accuracy of this specification can only be guaranteed provided: 1. Only original ASTROFLAME products as defined within this specification are used 2. These specific products are used & installed only by a competant, experienced installer & by strictly obeying the conditions & calculations mentioned in this specification, as well as all relevent technical instructions, operating manuals, setting manuals, installation manuals & all other ASTROFLAME data sheets. 3. The proposed performance, listed prerequisities & criteria conform with actual existing site conditions & have been checked & agreed by the installer & client.

ASTRO BATT®

TECHNICAL SCHEDULE
No. CF614

Unique identification code of product-type: CBCT

DESIGN TO CERTIFIRE CF 614
ASTRO BATT IN A FIRE RESISTANT CABLE TRAY & CABLE
PENETRATION SEAL THROUGH RIGID WALL

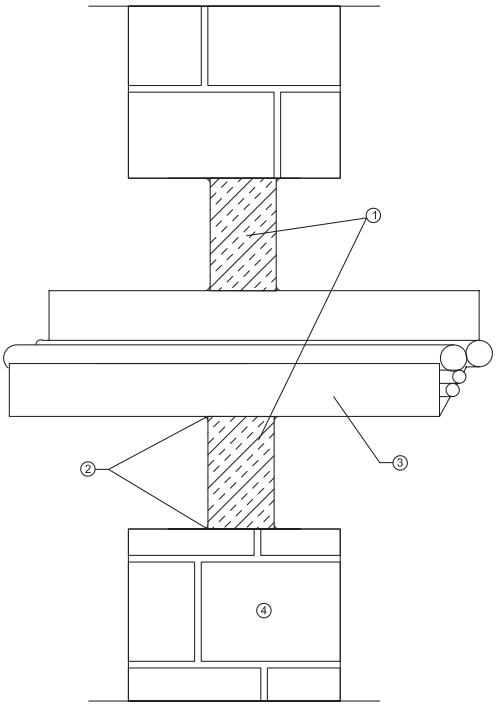

NOTES:
1 - ASTRO BATT 50mm THICKNESS - 140kg/m3
2 - ASTRO INTU MASTIC
3 - CABLE TRAY WITH CABLES
4 - RIGID WALL

ASTROFLAME MANUFACTURERS OF PASSIVE FIRE STOP PRODUCTS	Astroflame (FIreseals) Ltd Intumescent House Unit 8 The IO Centre Stephenson Road Segensworth Fareham, PO15 5RU	FILE NAME: DET 2-0001 DATE: 20/05/14	ASTROFLAME has provided this specification on the basis of data, information & site conditions given to ASTROFLAME by the client, the respective ASTROFLAME product information & the existing level of technical knowledge. This specification relates to the expected performance of the proposed detail, were it to be subjected to the standardised test against which the judgement was made. The accuracy of this specification can only be guaranteed provided: 1. Only original ASTROFLAME products as defined within this specification are used 2. These specific products are used & installed only by a competant, experienced installer & by strictly obeying the conditions & calculations mentioned in this specification, as well as all relevent technical instructions, operating manuals, setting manuals, installation manuals & all other ASTROFLAME data sheets. 3. The proposed performance, listed prerequisities & criteria conform with actual existing site conditions & have been checked & agreed by the installer & client.

Unique identification code of product-type: CBCT

Astro Batts Coating with Astro Intu Mastic)

Approval Matrix - Up To 120 Minute Floors

Product Name:	Astro Batts & Coating (with Astro Intu Mastic)		
Coating/DFT:	Astro Coating/1mm thick		
Density:	140kg/m3 minimum		
Barrier	Service	Integrity	Insulation
Double layer (100 & 120mm)	Cable Ladder (340mm wide by 100m high max)	120 minutes	60 minutes
	Cables up to 20mm diameter	120 minutes	60 minutes
	Areas of seal without services	120 minutes	120 minutes
Maximum aperture	1200 mm high by 600mm wide subject to a maximum area of 0.72m2 Multiple apertures must be separated by a minimum of 240mm in concrete/masonry constructions		
Walls	The walls shall be a minimum of 115mm thick The minimum density for the concrete or brick of the wall is 780kg/m3. All concrete, masonry walls shall have at least the same fire rating as that required for the barrier		
Application Technique	Concrete/masonry walls Boards cut to size (not joined) tightly friction fitted into the aperture at mid-depth of the floor. Board to aperture junction is sealed with Astro coating or Astro Intu Mastic. Apertures for penetrating items are to be tightly fitting and be sealed with Astro Coating or Astro Intu Mastic and must be separated by at least 240mm		
Service Coat-Back	Not required	U Value	Not Known
Service Support Requirements	Services should be rigidly supported via steel angles, hangers or channels, not further than 500mm the surface of the sealing system on both faces.		

ASTRO BATT®

TECHNICAL SCHEDULE
No. CF 614

Unique identification code of product-type: CBCT

DESIGN TO CERTIFIRE CF 614 ASTRO BATT IN A FIRE RESISTANT METALLIC PIPE PENETRATION SEAL THROUGH RIGID FLOOR

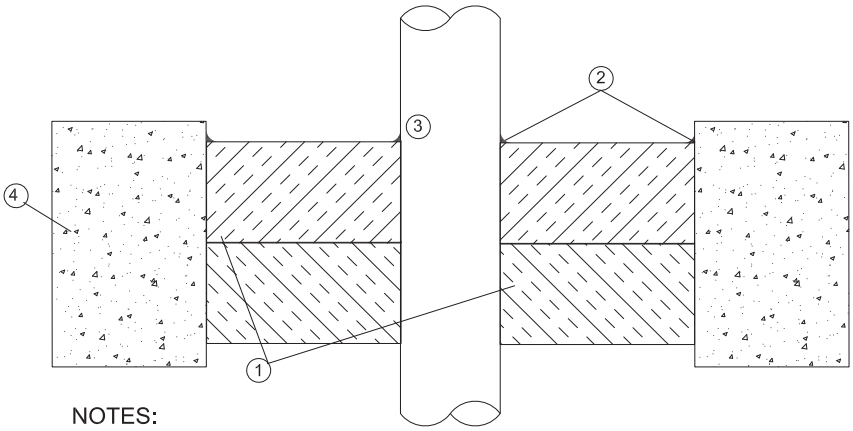

NOTES:
1 - ASTRO BATT 50mm THICKNESS - 140KG/m3
2 - ASTRO INTU MASTIC
3 - METALLIC PIPE
4 - RIGID CONSTRUCTION

FILE NAME: DET 2-0127
DATE: 20/05/14

Astroflame (FIreseals) LImIted
Intumescent House
Unit 8 The IO Centre
Stephenson Road
Segensworth
Fareham, PO15 5RU

ASTROFLAME has provided this specification on the basis of data, information & site conditions given to ASTROFLAME by the client, the respective ASTROFLAME product information & the existing level of technical knowledge. This specification relates to the expected performance of the proposed detail, were it to be subjected to the standardised test against which the judgement was made. The accuracy of this specification can only be guaranteed provided:
1. Only original ASTROFLAME products as defined within this specification are used
2. These specific products are used & installed only by a competant, experienced installer & by strictly obeying the conditions & calculations mentioned in this specification, as well as all relevent technical instructions, operating manuals, setting manuals, installation manuals & all other ASTROFLAME data sheets.
3. The proposed performance, listed prerequisities & criteria conform with actual existing site conditions & have been checked & agreed by the installer & client.

TECHNICAL DATA SHEET

ASTRO BATT®

TECHNICAL SCHEDULE
No. CF614

Unique identification code of product-type: CBCT

DESIGN TO CERTIFIRE CF 614 ASTRO BATT IN A FIRE RESISTANT CABLE TRAY & CABLES PENETRATION SEAL THROUGH RIGID FLOOR

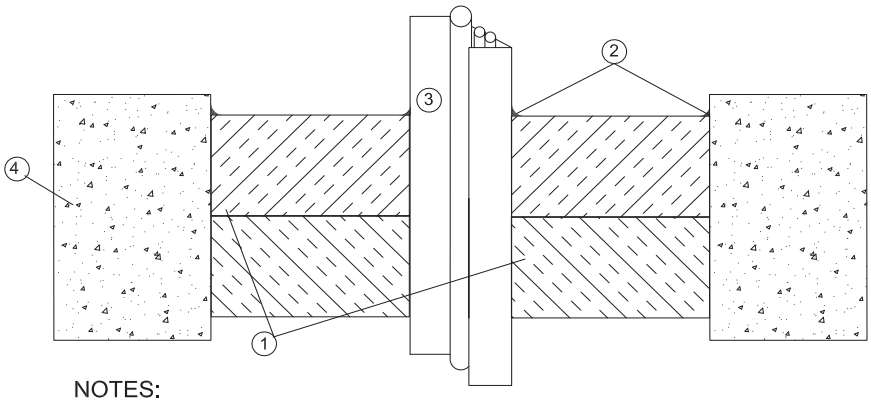

NOTES:
1 - ASTRO BATT 50mm THICKNESS - 140KG/m3
2 - ASTRO INTU MASTIC
3 - CABLE TRAY & CABLES
4 - RIGID CONSTRUCTION

FILE NAME: DET 2-0026
DATE: 20/05/14

Astroflame (Fireseals) Limited
Intumescent House
Unit 8 The IO Centre
Stephenson Road
Segensworth
Fareham, PO15 5RU

ASTROFLAME has provided this specification on the basis of data, information & site conditions given to ASTROFLAME by the client, the respective ASTROFLAME product information & the existing level of technical knowledge. This specification relates to the expected performance of the proposed detail, were it to be subjected to the standardised test against which the judgement was made. The accuracy of this specification can only be guaranteed provided:
1. Only original ASTROFLAME products as defined within this specification are used
2. These specific products are used & installed only by a competant, experienced installer & by strictly obeying the conditions & calculations mentioned in this specification, as well as all relevent technical instructions, operating manuals, setting manuals, installation manuals & all other ASTROFLAME data sheets.
3. The proposed performance, listed prerequisities & criteria conform with actual existing site conditions & have been checked & agreed by the installer & client.

Unique identification code of product-type: CBCT

Astro Batts & Coating (with Astro Intu Mastic)

Air Permeability EN 1026	**Pressure (Pa)**	Positive pressure (m3/h/m2)	Negative pressure (m3/h/m2)	Weather Capability	Not evaluated by this approval
	50	0.8	1.5		
	100	1.4	1.8		
Acoustic Rating BS EN ISO 10140-2: 2010	1 x 50mm thick			Movement Capability	Not evaluated by this approval
	Rw (C;Ctr)		22 (0;-3) dB		
	Dnew (C;Ctr)		32 (0;3) dB		
	2 x 50mm thick				
	Rw (C;Ctr)		28 (0;-3)dB		
	Dnew (C;Ctr)		38 (0;3)dB		

Further Information

Further information regarding the details contained in this data sheet may be obtained from Astroflame Fireseal Limited (Tel: 013329 844500)

Further information regarding CERTIFRE certification and other approved products can be obtained form CERTIFIRE (Tel: 01925 646777, website: www.warringtonfire.net)

Unique identification code of product-type: CBCT

Acoustic Isolation

BMTRADA

Laboratory measurement to BS EN ISO 10140-2 - Airborne Sound Insulation of Building Elements

UKAS TESTING No. 1762

Test Specimen Name: Astro Batt
Client: Astroflame (Fireseals) Limited
Test Specimen Installed By: BM TRADA
Area of Specimen (S): 1.00 m^2
Temperature in Test Rooms: 19.2 °C
Static Pressure: 10006.0 Pa
Humidity in Test Rooms: 44.0 %
Test Specimen Description: 500mm x 2000mm aperture filled with single layer Astro Batt with 80kg/m^3. See Appendix 3 for specimen details.

Ref. No.: MTZ/F12009/01/H/Rev1/AR1p020
Date of Test: 04/04/2012
Source Room Volume: 82.00 m^3
Receive Room Volume: 70.00 m^3

f, Hz	R, dB
50+	28.5
63+	24.8
80+	24.0
100	29.9
125	35.9
160	39.2
200	43.2
250	49.0
315	54.1
400	56.3
500	58.5
600	61.0
800	61.1
1000	58.5
1250	60.1
1600	64.4
2000	64.8
2500	64.4
3150	≥ 66.0
4000	≥ 65.3
5000	≥ 63.8
AAD	-25.2

Frequency range for rating in accordance with ISO 717-1

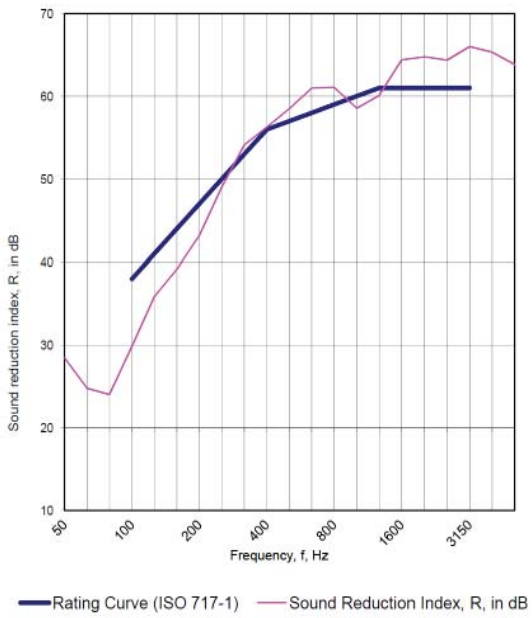

$D_{n,e,w}$ =	57 dB
$D_{n,e,w}+C$ =	55 dB
$D_{n,e,w}+C_{tr}$ =	48 dB

$C_{(50-3150)}$ =	-5 dB	$C_{tr\,(50-3150)}$ =	-15 dB
$C_{(50-5000)}$ =	-4 dB	$C_{tr\,(50-5000)}$ =	-15 dB
$C_{(100-5000)}$ =	-2 dB	$C_{tr\,(100-5000)}$ =	-9 dB

Martin Durham
Technical Officer

+ indicates that the frequency is outside of our UKAS accreditation and is for information only

The legal validity of this report can only be claimed on presentation of the complete report

Report for: Astroflame (Fireseals) Limited
Report Ref: Chilt/Z: 12009/01/H/Rev1/AR1 Page 11 of 12

ASTRO BATT®

TECHNICAL SCHEDULE
No. CF614

ASTROFLAME
MANUFACTURERS OF PASSIVE FIRE STOP PRODUCTS

Unique identification code of product-type: CBCT

Acoustic Isolation

BMTRADA

Laboratory measurement to BS EN ISO 10140-2 - Airborne Sound Insulation of Building Elements

UKAS TESTING No. 1762

Test Specimen Name: Astro Batt
Client: Astroflame (Fireseals) Limited
Test Specimen Installed By: BM TRADA
Area of Specimen (S): 1.00 m^2
Temperature in Test Rooms: 19.2 °C
Static Pressure: 10006.0 Pa
Humidity in Test Rooms: 44.0 %

Ref. No.: MTZ/F12009/01/H/Rev1/AR1p020
Date of Test: 04/04/2012
Source Room Volume: 82.00 m^3
Receive Room Volume: 70.00 m^3

Test Specimen Description: 500mm x 2000mm aperture filled with single layer Astro Batt with 80kg/m^3. See Appendix 3 for specimen details.

f, Hz		R ,dB
50*		18.5
63*		14.8
80*		14.0
100		19.9
125		25.9
160		29.2
200		33.2
250		39.0
315		44.1
400		46.3
500		48.5
600		51.0
800		51.1
1000		48.5
1250		50.1
1600		54.4
2000		54.8
2500		54.4
3150	≥	56.0
4000	≥	55.3
5000	≥	53.8
AAD		-25.2

Frequency range for rating in accordance with ISO 717-1

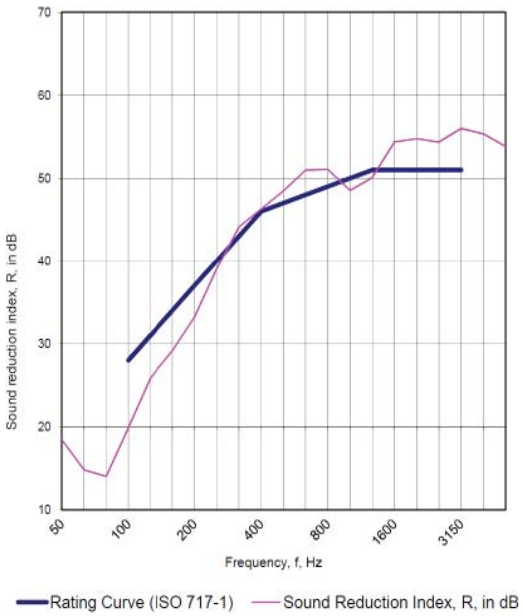

R_w =	47 dB
R_w+C =	45 dB
R_w+C_{tr} =	38 dB

$C_{(50-3150)}$ =	-5	dB	$C_{tr\,(50-3150)}$ =	-15	dB
$C_{(50-5000)}$ =	-4	dB	$C_{tr\,(50-5000)}$ =	-15	dB
$C_{(100-5000)}$ =	-2	dB	$C_{tr\,(100-5000)}$ =	-9	dB

Martin Durham
Technical Officer

* indicates that the frequency is outside of our UKAS accreditation and is for information only

The legal validity of this report can only be claimed on presentation of the complete report

Report for: Astroflame (Fireseals) Limited
Report Ref: Chilt/Z: 12009/01/H/Rev1/AR1
Page 9 of 12

ASTRO BATT®

TECHNICAL SCHEDULE
No. CF614

Unique identification code of product-type: CBCT

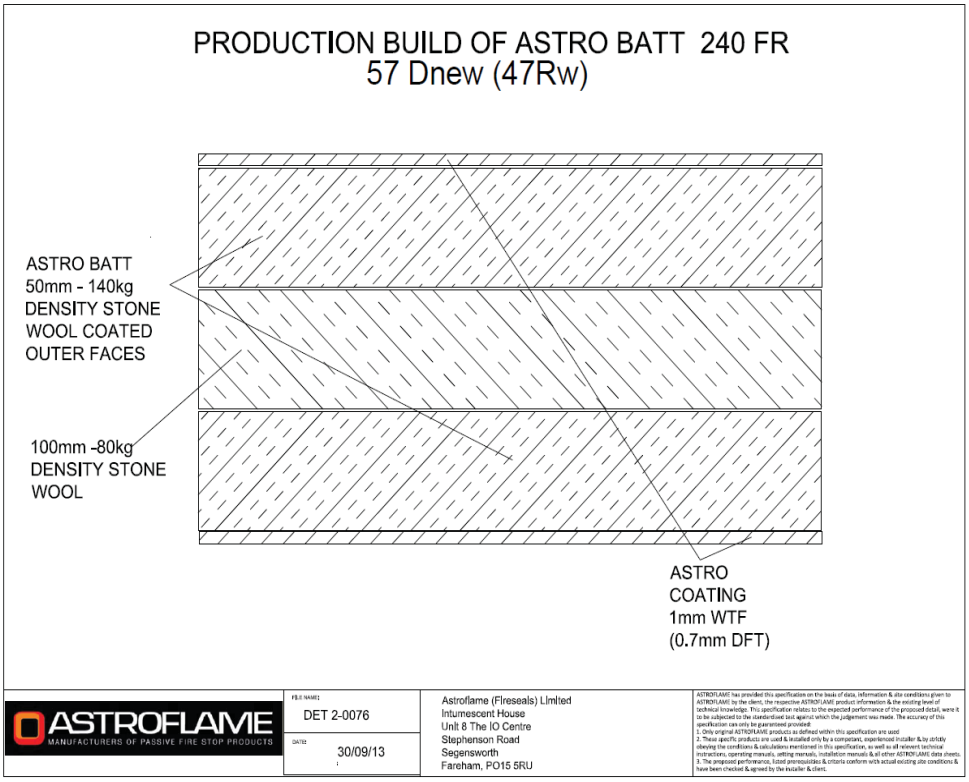

Unique identification code of product-type: CBCT

Acoustic Isolation

BMTRADA

Laboratory measurement to BS EN ISO 10140-2 - Airborne Sound Insulation of Building Elements

UKAS TESTING No. 1762

Test Specimen Name: Astro Batt
Client: Astroflame (Fireseals) Limited
Test Specimen Installed By: BM TRADA
Area of Specimen (S): 1.00 m^2
Temperature in Test Rooms: 19.2 °C
Static Pressure: 10006.0 Pa
Humidity in Test Rooms: 44.0 %
Test Specimen Description: 500mm x 2000mm aperture filled with single layer Astro Batt. See Appendix 3 for specimen details.

Reference Number: MTZ/F12009/01/G/AR1p019
Date of Test: 04/04/2012
Source Room Volume: 82.00 m^3
Receive Room Volume: 70.00 m^3

f, Hz	R ,dB
50+	23.0
63+	13.6
80+	13.4
100	19.0
125	13.7
160	17.8
200	23.5
250	26.2
315	27.2
400	24.8
500	26.2
600	26.3
800	24.6
1000	18.3
1250	15.8
1600	25.6
2000	27.5
2500	24.5
3150	31.0
4000	32.4
5000	38.7
AAD	-28.6

Frequency range for rating in accordance with ISO 717-1

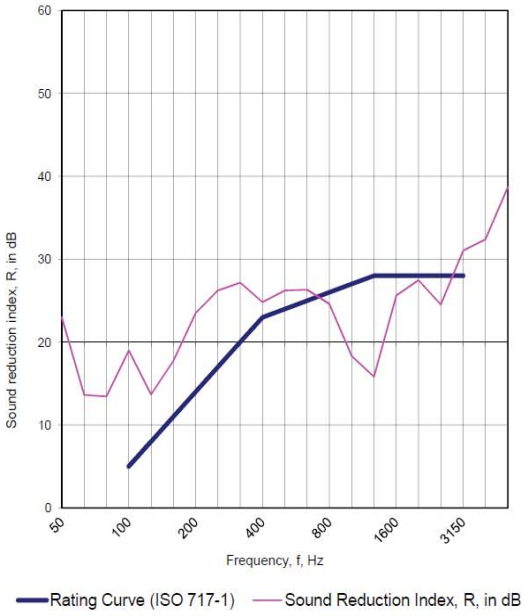

R_w =	24 dB
R_w+C =	22 dB
R_w+C_{tr} =	21 dB

$C_{(50-3150)}$ =	-2 dB	$C_{tr\,(50-3150)}$ =	-4	dB
$C_{(50-5000)}$ =	-1 dB	$C_{tr\,(50-5000)}$ =	-4	dB
$C_{(100-5000)}$ =	-1 dB	$C_{tr\,(100-5000)}$ =	-3	dB

Martin Durham
Technical Officer

+ indicates that the frequency is outside of our UKAS accreditation and is for information only

The legal validity of this report can only be claimed on presentation of the complete report

Report for: Astroflame (Fireseals) Limited
Report Ref: Chilt/Z: 12009/01/G/AR1
Page 9 of 12

ASTRO BATT®

TECHNICAL SCHEDULE
No. CF614

ASTROFLAME
MANUFACTURERS OF PASSIVE FIRE STOP PRODUCTS

Unique identification code of product-type: CBCT

Acoustic Isolation

BMTRADA

Laboratory measurement to BS EN ISO 10140-2 - Airborne Sound Insulation of Building Elements

UKAS TESTING No. 1762

Test Specimen Name: Astro Batt
Client: Astroflame (Fireseals) Limited
Test Specimen Installed By: BM TRADA
Area of Specimen (S): 1.00 m^2
Temperature in Test Rooms: 19.2 °C
Static Pressure: 10006.0 Pa
Humidity in Test Rooms: 44.0 %
Test Specimen Description: 500mm x 2000mm aperture filled with single layer Astro Batt. See Appendix 3 for specimen details.

Reference Number: MTZ/F12009/01/G/AR1p019
Date of Test: 04/04/2012

Source Room Volume: 82.00 m^3
Receive Room Volume: 70.00 m^3

f, Hz	R ,dB
50+	33.0
63+	23.6
80+	23.4
100	29.0
125	23.7
160	27.8
200	33.5
250	36.2
315	37.2
400	34.8
500	36.2
600	36.3
800	34.6
1000	28.3
1250	25.8
1600	35.6
2000	37.5
2500	34.5
3150	41.0
4000	42.4
5000	48.7
AAD	-28.6

Frequency range for rating in accordance with ISO 717-1

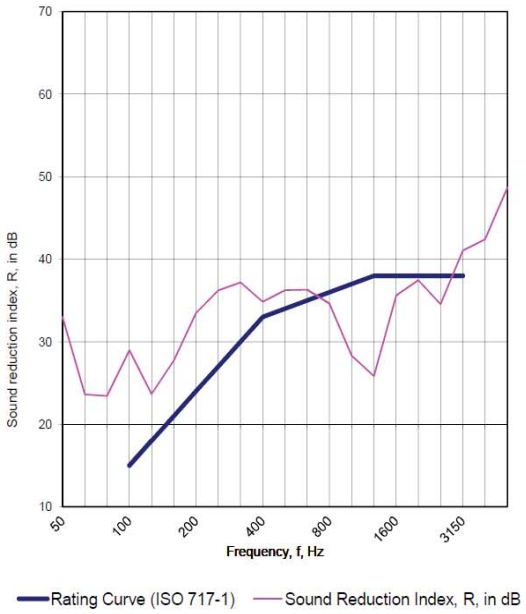

$D_{n,e,w}$ =	34 dB
$D_{n,e,w}+C$ =	32 dB
$D_{n,e,w}+C_{tr}$ =	31 dB

$C_{(50-3150)}$ =	-2 dB	$C_{tr\ (50-3150)}$ =	-4 dB
$C_{(50-5000)}$ =	-1 dB	$C_{tr\ (50-5000)}$ =	-4 dB
$C_{(100-5000)}$ =	-1 dB	$C_{tr\ (100-5000)}$ =	-3 dB

Martin Durham
Technical Officer

+ indicates that the frequency is outside of our UKAS accreditation and is for information only

The legal validity of this report can only be claimed on presentation of the complete report

Report for: Astroflame (Fireseals) Limited
Report Ref: Chilt/Z: 12009/01/G/AR1 Page 11 of 12

ASTRO BATT®

TECHNICAL SCHEDULE
No. CF614

Unique identification code of product-type: CBCT

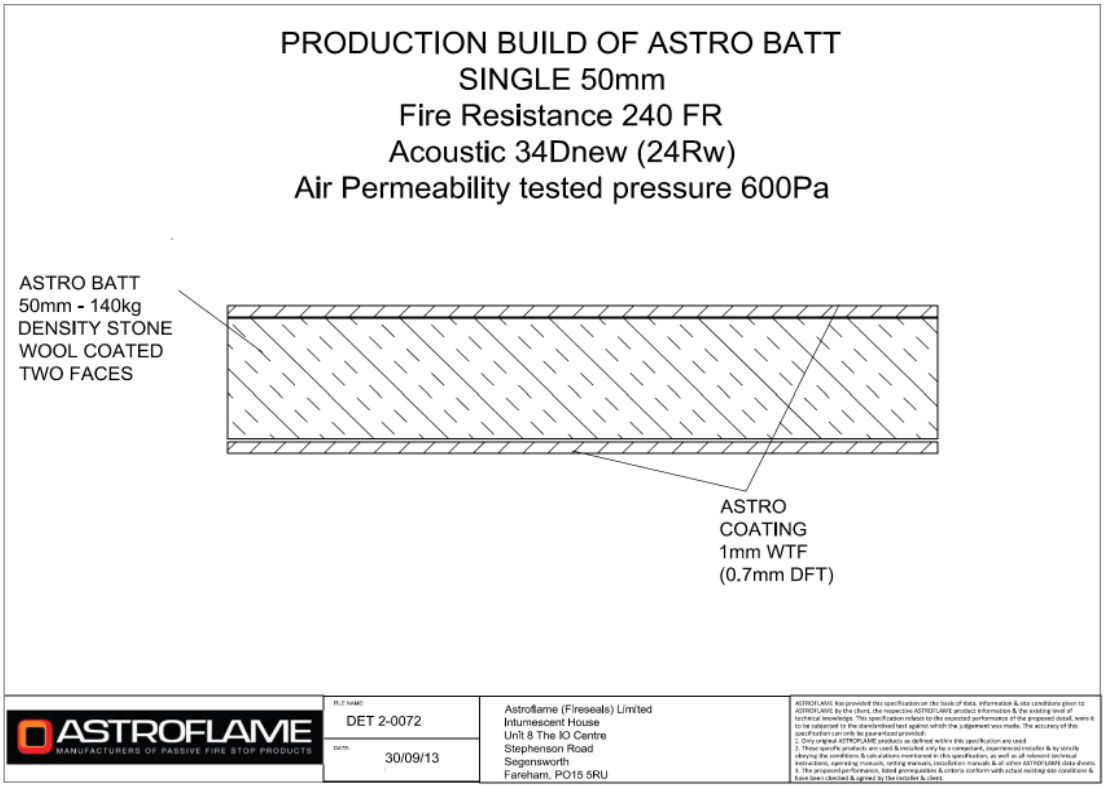

Unique identification code of product-type: CBCT

Technical specification document
Air Permeability Test

No: Chilt/P12083/tec2

Test For: Astroflame Fireseal Limited, Westminster Industrial Estate, Tamworth Road, Measham, DE12 7DS

Performance testing to the principles of BS EN 1026: 2000 windows and doors - Air permeability - Test method was conducted on your panel on 11 September 2012. The technical specification is detailed below. The specimen was delivered to Chiltern Dynamics laboratory on 10 September 2012

Description of construction

The specimen was identified as Astro Batt (50mm). The overall panel dimensions were 600mm wide x 1200mm high x 50mm deep and mounted within a softwood subframe for installation into the test rig

Panel

	Material/type	Dimensions (mm)	Density (kg/m3)
Panel	Astro Batt wool coated both faces	50 thick	140kg
Coating	Astro coating	1 thick (wet thickness)	-

Unique identification code of product-type: CBCT

Air Permeability Test

BMTRADA

Results of Test: Chilt/P12083/02/AR1

Astroflame (Fireseals) Limited

Intumescent House
Unit 8, The IO Centre
Stephenson Road
Segensworth, Fareham
PO15 5RU

This document confirms that performance testing was conducted on 11 September 2012. Testing was conducted the principles of the following standard:-

- BS EN 1026: 2000 Windows and doors - Air permeability - Test method.

The following results were achieved

Product tested			Astro Batt (50mm)	
	Results under positive chamber pressure		Results under negative chamber pressure	
Pressure (Pa)	Leakage (m^3/h)	Leakage ($m^3/m^2/h$)	Leakage (m^3/h)	Leakage ($m^3/m^2/h$)
50	0.6	0.8	1.1	1.5
100	1.0	1.4	1.3	1.8
150	2.8	3.9	1.5	2.1
200	3.8	5.3	1.9	2.6
250	4.5	6.3	2.0	2.8
300	5.0	6.9	2.4	3.3
450	5.1	7.1	1.9	2.6
600	6.7	9.3	2.2	3.1

The results relate only to the specimen tested, as detailed in the technical specification Chilt/P12083/tec2/AR1

Paul Andrews – Head of Section

Vincent Kerrigan - Technical Manager
Date: 31 October 2013

BM TRADA
Chiltern House, Stocking Lane, Hughenden Valley, High Wycombe, HP14 4ND, United Kingdom
Tel: 01494 569800 Fax: 01494 564895
Web: www.bmtradagroup.com
Email: testing@bmtrada.com
This document is confidential and remains the property of Chiltern International Fire Ltd, trading as BM TRADA

Page 3 of 5